Technical Instructions

February 4, 2003

Dodge Engineering & Controls, Inc.

ESL1B2 & ESL2B2 Linear Electronic Valve Actuator

Proportional Control (0-10 VDC or 4-20 mA) for GF2A & GF3A Series Valves

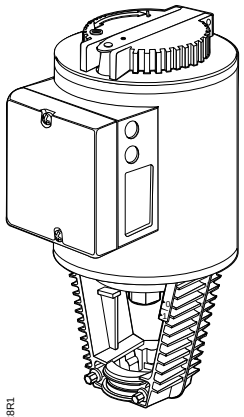

EA0228R1

c UL us LISTED

Description

The ESL1B2 & ESL2B2 Series modulating electronic valve actuator requires a 24 Vac supply and receives a 0 to 10 Vdc or a 4 to 20 mA control signal to proportionally control a valve. This actuator is designed to work with the GF series valves with a 3/4-inch (20 mm) stroke and 1 ½ inch (40mm) stroke in liquid and steam service applications.

Features

- Direct-coupled installation requires no special tools or adjustments
- Visual and electronic stroke indication
- Die-cast aluminum housing
- Manual override
- Spring return to fail-safe position
- Automatic stroke calibration
- Maintenance-free

Product Numbers

Product Number	Action	Actuator Stroke
ESL1B2	Spring Return	3/4-inch (20 mm)
ESL2B2	Spring Return	1-1/2 inch (40 mm)

Warning/Caution Notations

WARNING:	⚠	Personal injury/loss of life may occur if a procedure is not performed as specified.
CAUTION:	⚠	Equipment damage, or loss of data may occur if the user does not follow a procedure as specified.

Specifications

Power Supply	Operating voltage	24 Vac ±20%
	Frequency	50/60 Hz
	Power consumption	
	ESL1B2	18 VA/ 12W
	ESL2B2	28 VA /20W
Control signal	Control input (Y)	
	Voltage	0 to 10 Vdc or 4 to 20 mA
	Maximum Impedance	0 to 10 Vdc 100K ohms 4 to 20 mA, 250 ohms
	Control input (Z)	
	Resistance	0 to 1000 ohms
	Voltage	0 to 1.6 Vdc
Feedback signal	Control output (U)	
	Voltage	0 to 10 Vdc
	Load impedance	>500 ohms
	Current	4 to 20 mA
	Load impedance	<500 ohms
Equipment rating	Rating	Class 2 according to UL, CSA
Function	Nominal stroke	
	ESL1B2	3/4-inch (20 mm)
	ESL2B2	1-1/2 inches (40 mm)
	Run time with control operation (full stroke)	Open/Close / Spring Return
	ESL1B2	120 sec. / 15 sec
	ESL2B2	120 sec. / 20 sec
	Nominal Force	**Stroke** / **Force**
	NC and 3-way upper	0% / 640 lbs. (2800 N)
	NO and 3-way by-pass	100% / 1000 lbs. (4400 N)
Housing	Mounting location	NEMA 1 (interior only) NEMA TYPE 3R rated when installed with 599-10065 weather shield. See *Accessories.*
Ambient conditions	Ambient temperature	5°F to 130°F (-15°C to 55°C)
Agency certification	UL	UL873
	cUL Certified to Canadian standard	C22.2 No. 24-93
	CE Conformity as per the EMC directive	89/336/EEC
	Low voltage directive	78/23/EEC

Specifications, continued

Miscellaneous

Media temperature (check valve body rating)	14° to 428°F (-10°C to 220°C)
Conduit opening	1/2-inch NPSM
Dimensions	See Figure 20
Weight	
ESL1B2	18.9 lbs. (8,6 kg)
ESL2B2	22 lbs. (10,0 kg)

Accessories

Installation instructions are included with each accessory.

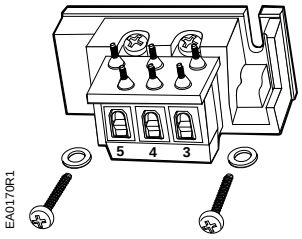

Figure 1. Auxiliary Switch.

ASC1.6 Auxiliary switch sends a signal to indicate the valve is in the 0% stroke position. Switching point is fixed at the 0% stroke position.

Switching capacity	24 Vac 4A resistive, 2A inductive
Lowest recommended current	10 mA

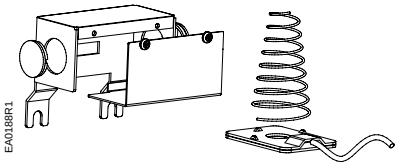

Figure 2. Packing Heating Element.

599-00418 Allows the stem to move freely in valves which control fluids at temperatures below 32°F (0°C). Prevents ice crystal formation on the stem which may damage the packing.

Operating Voltage	24 Vac
Heating Output	20W

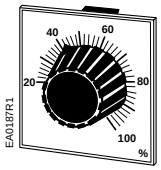

Figure 3. Remote Setting Unit.

FZA21.11 A potentiometer used for manual control or remote setting of minimum positions of controlled devices. Suitable for flush panel mounting only.

Control Input (R)	0 to 1000 ohms

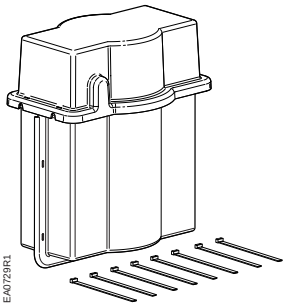

Figure 4. Weather Shield.

599-10065 The ESL1B2/ESL2B2 actuator is UL listed to meet NEMA Type 3R requirements (a degree of protection against rain, sleet, and damage from external ice formation) when installed with Weather Shield and outdoor-rated conduit fittings in the vertical position. See *Service Kits* for replacement Ultraviolet resistant cable ties.

Service Kits

Circuit board replacement	4 668 5748 8
Manual override kit	4268 5510 8
Plastic wiring compartment cover	4 104 5582 8
Stem retainer kit	
Contains one stem nut (Figure 7, Item 6) and one stem retainer clip.	
2-1/2 and 3-inch valves	599-10048
4, 5, and 6-inch valves	599-10049
Retainer clamp kit	599-10200
Ultraviolet (UV) resistant cable ties (pkg. of 8)	538-994

WARNING:

This product contains a spring under high compression. Do not attempt to disassemble the actuator.

Operation

A 0 to 10 Vdc or a 4 to 20 mA control signal controls the actuator. The actuator, mounted on a valve, produces a stroke proportional to the input signal. When power is turned off or in the event of a power failure, the actuator spring returns the valve to its normal position.

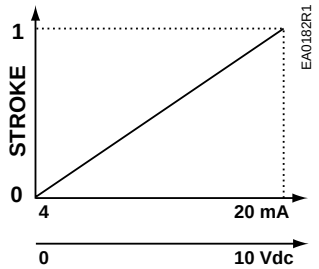

Figure 5. Input Signal.

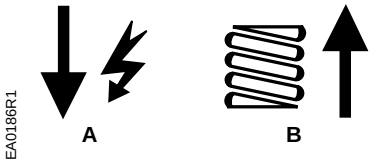

Figure 6. Spring Return.

ESL1B2 and ESL2B2 Details

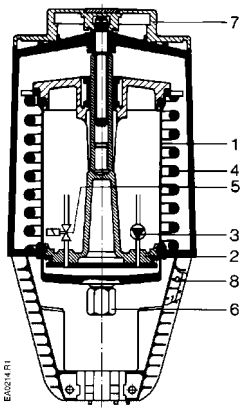

Figure 7. Actuator Design.

Legend

1. Pressure cylinder
2. Piston
3. Oscillating pump
4. Return springs
5. Bypass valve
6. Coupling piece (stem nut)
7. Manual setting knob
8. Position indicator

Mounting and Installation

The vertical position is the required position for mounting and the only position for NEMA Type 3R rating with the Weather Shield. Acceptable mounting positions are shown in Figure 8.

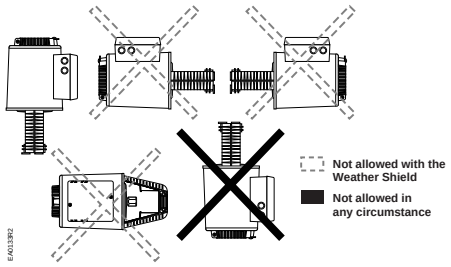

Figure 8. Acceptable Mounting Positions.

Allow four inches (100 mm) around the sides and back of the actuator and eight inches (200 mm) above and to the front of the actuator.

See dimensions in Figure 20.

Detailed installation instructions for field mounting are shipped with the actuator.

CAUTION:

Use care when removing the knockout. Do not damage the circuit board. Use the top knockout position, if possible.

Start up

Check the wiring for proper connections.

NOTE: The valve body assembly determines the complete assembly action.

Override Control

The override control input (Z) has three modes of operation:

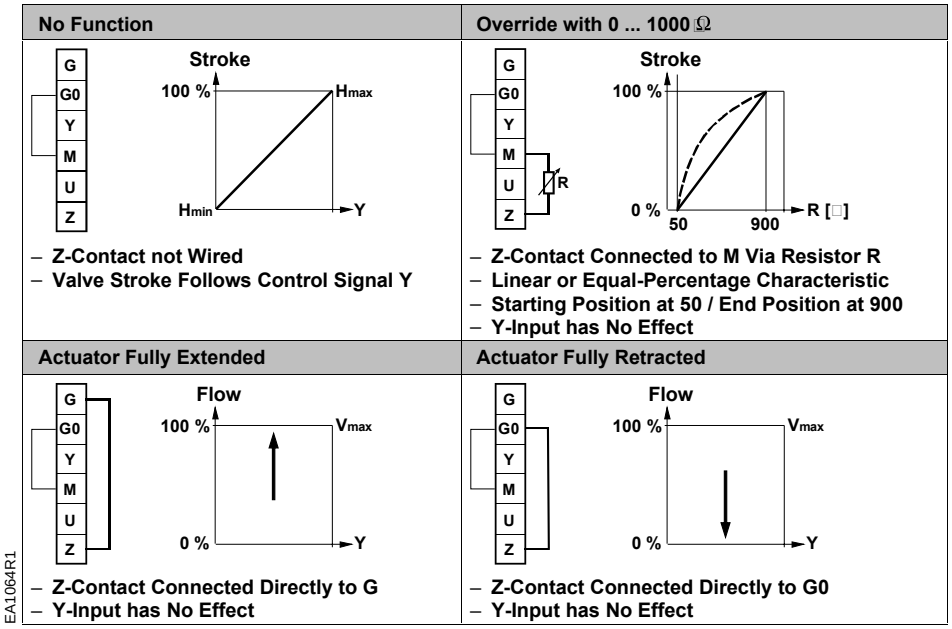

NOTE: The Z-modes have a "direct acting" factory setting.

Start-up continued

Stroke Calibration

To determine the stroke positions 0% and 100% in the valve, calibration is required when the valve/actuator are commissioned for the first time. The actuator must be mechanically connected to a valve and must have a supply voltage of 24 Vac. Repeat the calibration procedure as often as necessary

CAUTION:

Before starting calibration, be sure that the manual adjuster is set to **Automatic** for the actual values to register.

There is a slot on the printed circuit boards for the actuators. To initiate the calibration procedure, the contacts inside this slot must be short-circuited (possibly with a screw driver). See Figure 9.

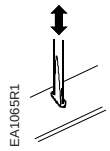

Figure 9.

Automatic calibration proceeds as follows (see Figure 10):

- Actuator runs to the 0% stroke position (1), green LED flashes.
- Actuator then runs to the 100% stroke position (2), green LED flashes.
- Measured values are stored in the EPROM.
- The actuator now moves to the position defined by control signal Y or Z (3), and the green LED now glows steady (normal operation).
- Throughout this procedure, output U is inactive, meaning the values only represent actual positions when the green LED stops flashing and remains on continuously.

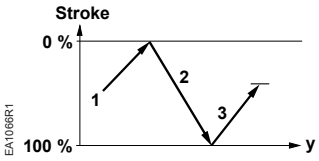

Figure 10.
Automatic Calibration

Table 1. LED Status.

LED	Display	Function	Action
Green	ON	Normal Operation	Automatic operation
	Flashing	Stroke calibration In Progress	Wait for calibration to be completed (LED stops flashing)
Red	ON	Faulty stroke calibration Internal Error	- Check mounting - Restart stroke calibration (by short-circuiting calibration slot) - Replace electronics
	Flashing	Inner valve jammed	Check the valve
	OFF	• No power supply • Faulty electronics	-Check mains -Replace electronics

Start-up continued

Standard Features

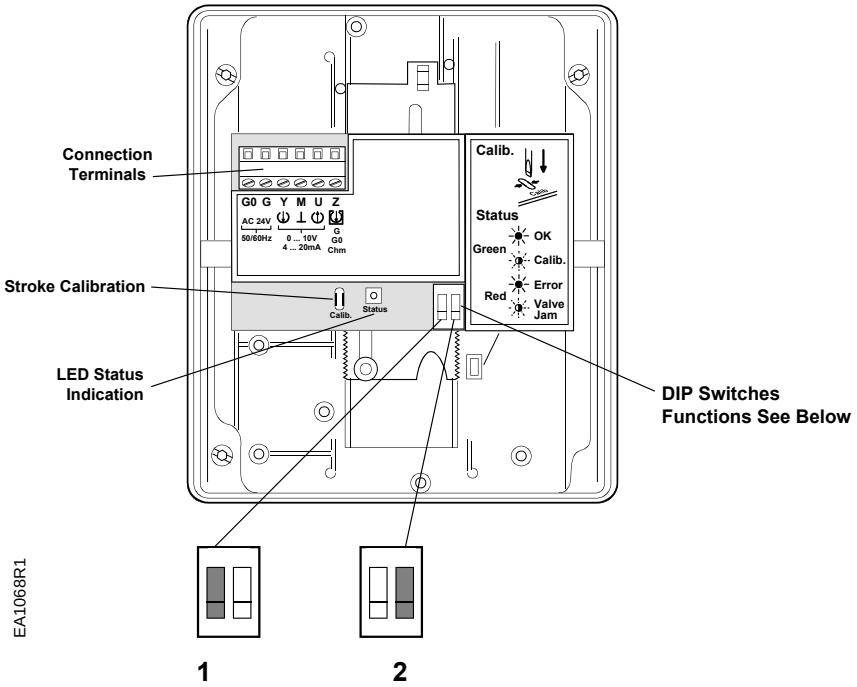

Figure 11. DIP Switches.

DIP Switches (From Left to Right)	**1 Selection of Control Signal**	**2 Selection of Flow Characteristic**
ON	4 to 20 mA	Modified*
OFF (Factory Settings)	0 to 10 Vdc	Default

* Changing the default setting will modify an equal percentage valve to a linear flow characteristic. When set to default, the flow characteristic is determined by the valve body.

Start-up continued **Normally Closed Valve**	Actuator pressure cylinder moves: • Outward (0 to 1): Valve opens. • Inward (1 to 0): Valve closes.
Normally Open Valve	Actuator pressure cylinder moves: • Outward (0 to 1): Valve closes. • Inward (1 to 0): Valve opens.
Three-way Valve	Actuator pressure cylinder moves: • Outward (0 to 1): Valve opens between ports NC and C. • Inward (1 to 0): Valve opens between ports NO and C.

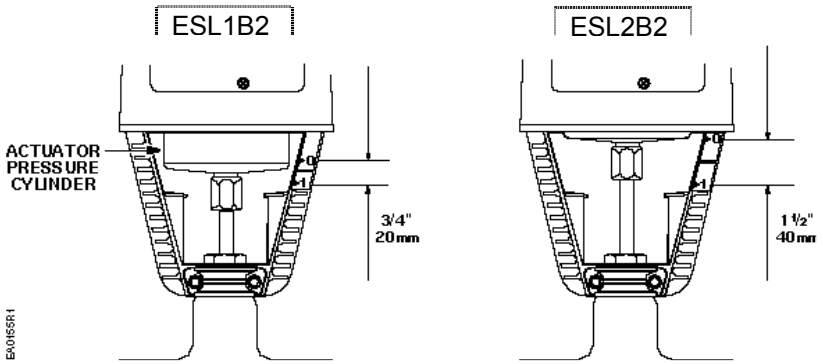

Figure 12. Valve Stem Travel Indication.

Start-Up continued

Manual operation

Release the crank arm of the manual setting knob located on the top of the actuator. See Figure 13.

A red scale appears in a window in the manual setting knob as you turn the crank clockwise, See Figure 13. This scale indicates the effective valve stroke in millimeters.

Each complete revolution (360°) is equal to 2 mm of stroke. The numbers 2 to 20 or 2 to 40 are visible depending on the stroke of the actuator.

If a signal is sent to the actuator while it is in manual operation, the actuator will move but the control will not be accurate. The valve cannot be commanded to its 0% position while in manual operation.

CAUTION:

Do not attempt automatic operation of the actuator when the red scale is visible.

Automatic operation

When returning to automatic control, turn the crank arm of the manual setting knob counterclockwise until the red numbers disappear. It is essential that the window is clear and the crank arm is snapped into position. See Figure 14.

NOTE: It is possible to secure the manual override handle in place by inserting a # 8 ×1-3/4-inch or M5 × 30 mm thread-forming screw through the handle.

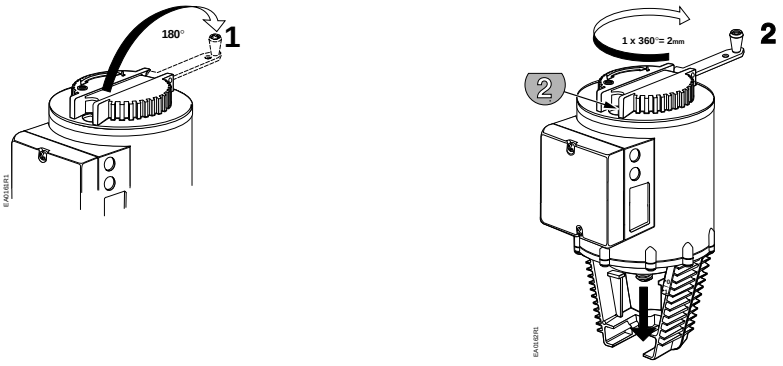

Figure 13. Manual Operation.

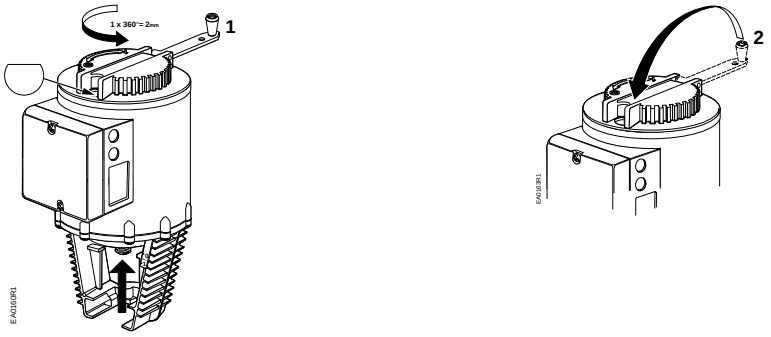

Figure 14. Automatic Operation.

Wiring

Do not use autotransformers. Use earth ground isolating step-down Class 2 transformers.

Determine supply transformer rating by summing total VA of all actuators used. The maximum rating for Class 2 step-down transformer is 100 VA.

Actuator	Power Consumption	Actuators per Class 2 Supply Circuit* (80% of transformer VA)
ESL1B2	17 VA	4
ESL2B2	28 VA	2

* Operating more actuators requires additional transformers or separate 100 VA power supplies.

Wiring Diagrams

The position output signal U will switch from 0 to 10 Vdc to 4 to 20 mA when a 4 to 20 mA input signal is selected and used on the Y terminal.

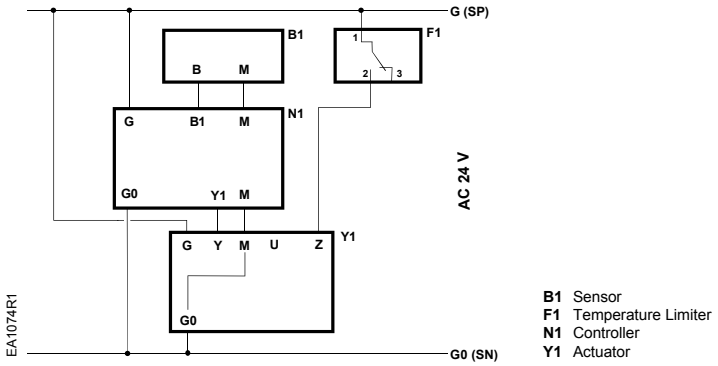

Figure 15. Connecting Terminals.

24 Vac	
G	System potential (SP)
G0	System neutral (SN)
Y	Control input 0 to 10 Vdc or 4 to 20 mA (DIP switch selectable)
Z	Override control
M	Measuring neutral
U	Output for 0 to 10 Vdc or 4 to 20 mA measuring voltage. See Table 1.

Table 1. Actuator Output Signal.

Actuator input signal	Receiving Impedance	
	low (<500 Ohm)	high (>10k Ohm)
0 to 10 Vdc	0 to 20 mA	0 to 10 Vdc
4 to 20 mA	4 to 20 mA	2 to 10 Vdc

Wiring Diagrams, continued

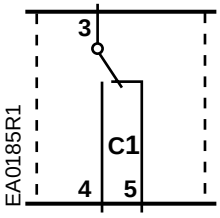

Figure 16. Auxiliary Switch ASC1.6.

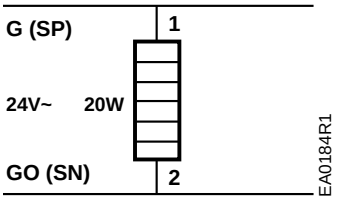

Figure 17. Packing Heating Element 599-00418.

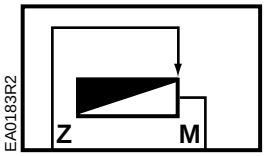

Figure 18. Remote Setting Unit FZA21.11.

Dimensions

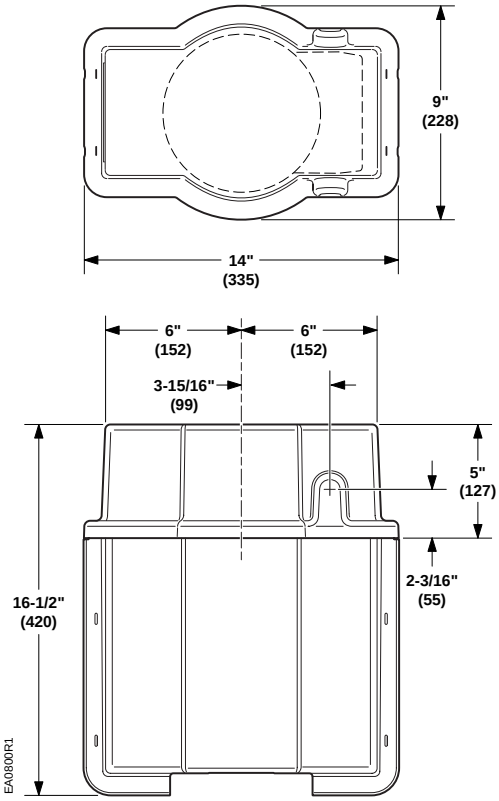

Figure 19. Dimensions of the 599-10065 Weather Shield shown in Inches (Millimeters).

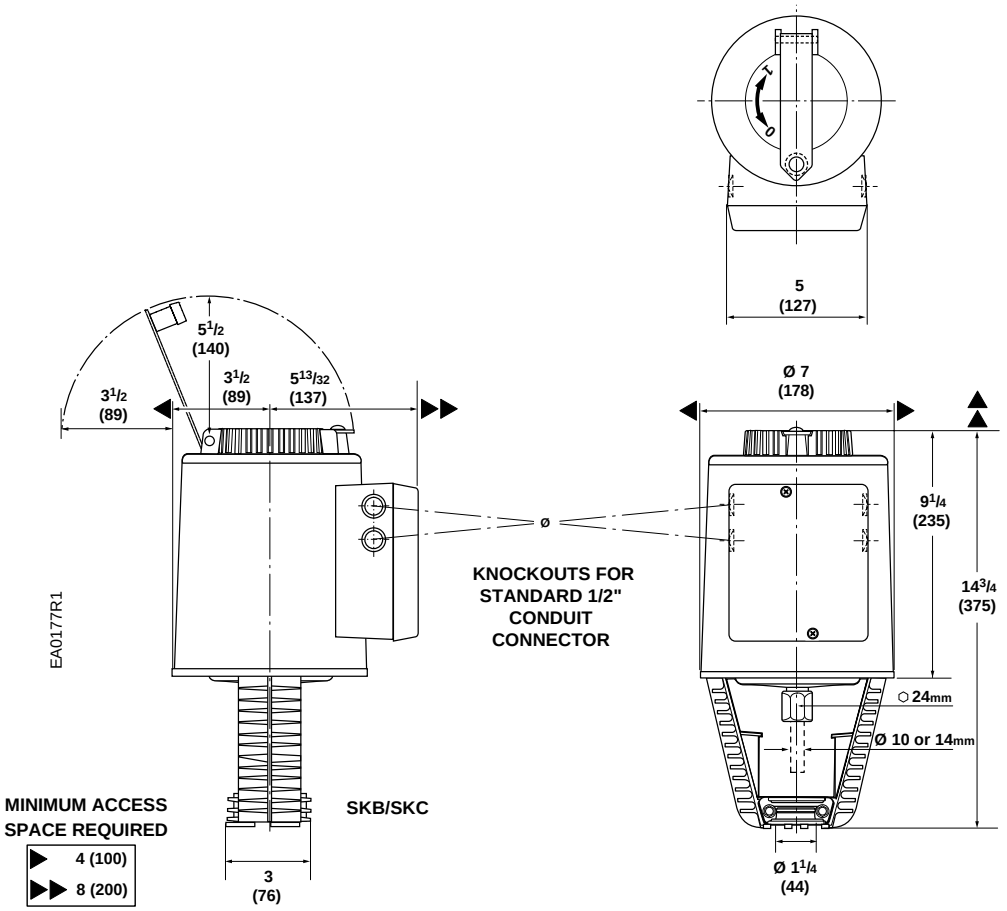

Figure 20. Dimensions of ESL1B2/ESL2B2 Shown in Inches (Millimeters).

Information in this publication is based on current specifications. The company reserves the right to make changes in specifications and models as design improvements are introduced.